TKI PRODUCTS
WHERE IT'S POSSIBLE

L. F. SCHMIDT LICENSE No. 43409 STATE OF FLORIDA PROFESSIONAL ENGINEER

Digitally signed by Lyndon F Schmidt
Date: 2023.09.25 14:31:21 -04'00'

This item has been digitally signed and sealed by **L. F. Schmidt, P.E.** on the date adjacent to the seal.
Printed copies of this document are not considered signed and sealed and the signature must be verified on any electronic copies.

THIS PRODUCT APPROVAL IS VALID ONLY FOR THE STATE OF FLORIDA

"BUILDER SERIES" OPAQUE FIBERGLASS DOOR SINGLE w/ SIDELITE(S)

INSWING/OUTSWING "NON-IMPACT"

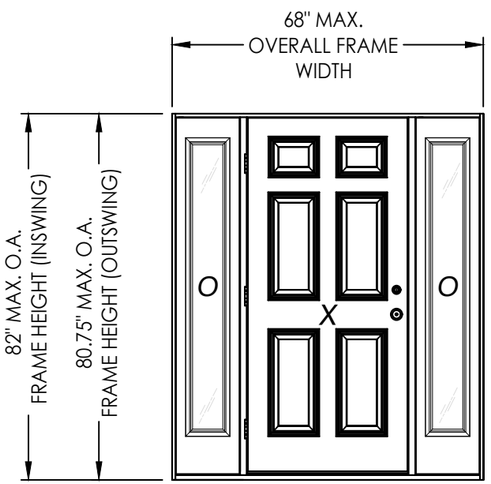

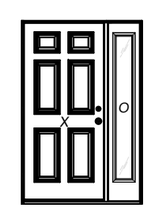

XO, OX

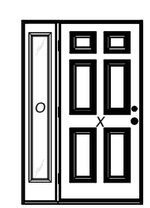

OX, XO

CONTINUOUS HEAD & SILL

GENERAL NOTES

1. This product has been evaluated and is in compliance with the 8th Edition (2023) Florida Building Code (FBC) structural requirements excluding the "High Velocity Hurricane Zone" (HVHZ).
2. Product anchors shall be as listed and spaced as shown on details. Anchor embedment to base material shall be beyond wall dressing or stucco.
3. When used in areas requiring wind borne debris protection, this product is required to be protected with an impact resistant covering that complies with FBC Sections 1609.1.2 & R301.2.1.2.
4. For 2x stud framing construction, anchoring of these units shall be the same as that shown for 2x buck masonry construction.
5. Site conditions that deviate from the details of this drawing require further engineering analysis by a licensed engineer or registered architect.

CONFIGURATION	MAX. FRAME DIMENSION	DESIGN PRESSURE (PSF) INSWING		DESIGN PRESSURE (PSF) OUTSWING	
		POSITIVE	NEGATIVE	POSITIVE	NEGATIVE
OX, XO	52.75" x 82.0"	+50.0	-50.0	+45.0	-45.0
OXO	68.0" x 82.0"	+50.0	-50.0	+45.0	-45.0

TABLE OF CONTENTS

SHEET #	DESCRIPTION	SHEET #	
1	Typical Elevations, Design Pressures & General Notes	8	Horizontal & Vertical Cross Sections (Direct to Masonry)
2	Door Panel Details	9	Vertical Cross Sections (Thresholds)
3	Sidelite Panel Details	10	Buck Anchoring
4	Elevations	11	Frame Anchoring & Hardware Details
5	Horizontal & Vertical Cross Sections	12	Lite Frame & Glazing Details
6	Horizontal & Vertical Cross Sections (2X Buck)	13	Bill of Materials & Components
7	Horizontal & Vertical Cross Sections (1X Buck)		

Documents Prepared By:
Lyndon F. Schmidt
P.E. No. 43409
RW BUILDING CONSULTANTS, INC.
P.O. Box 230, Valrico, FL 33595
Phone No.: 813.659.9197
FBPE Registry No. 9813

PRODUCT: TKI PRODUCTS FIBERGLASS DOOR
PART OR ASSEMBLY: TYPICAL ELEVATION, DESIGN PRESSURES & GENERAL NOTES

NO.	DATE	REVISIONS	BY

DATE: 9/25/23
SCALE: N.T.S.
DWG. BY: RW
CHK. BY: LFS
DRAWING NO.: FL-42433.2
SHEET 1 OF 13

© 2023 R.W. Building Consultants Inc.

Z:\2023 FBC Drawings\TKI Products\FL-42433\FL-42433.2.dwg

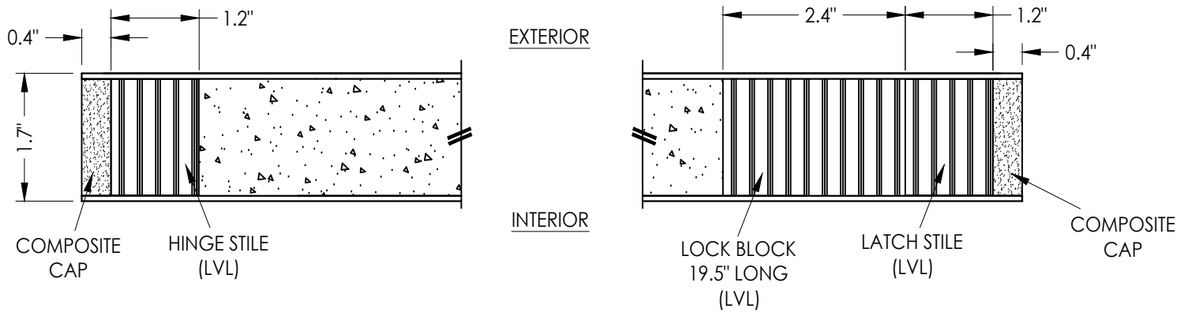

1/2 **HORIZONTAL CROSS SECTION**

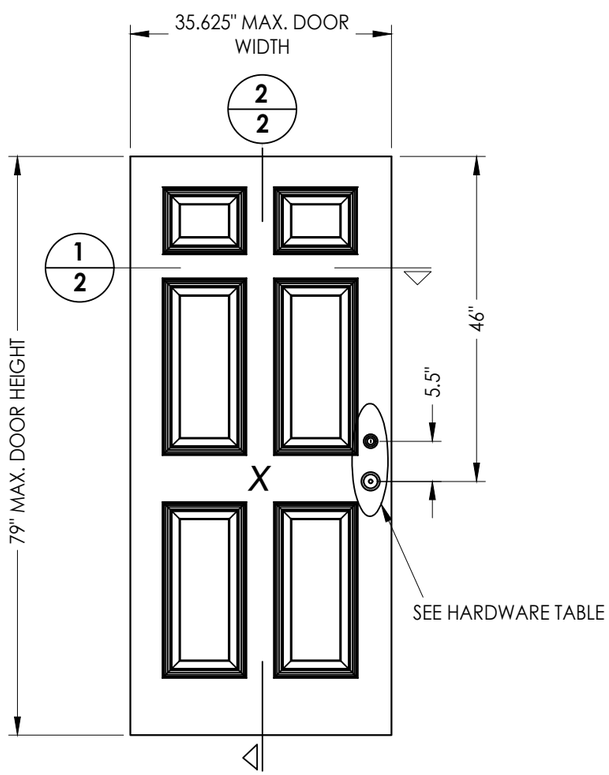

40 **FIBERGLASS DOOR PANEL**
BUILDER SERIES

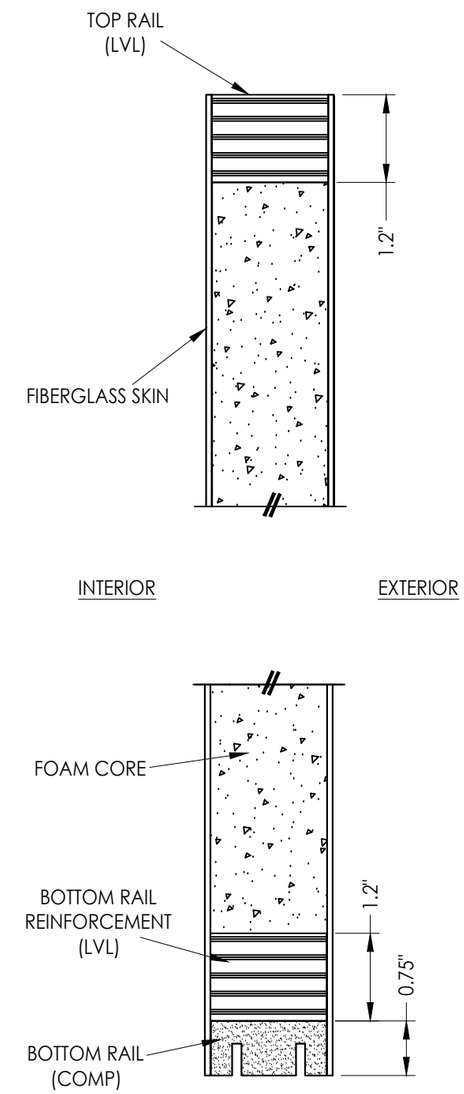

2/2 **VERTICAL CROSS SECTION**

HARDWARE TABLE		
MANUFACTURER	MODEL	
KWIKSET	KNOB:	SIGNATURE SERIES
	DEADBOLT:	SIGNATURE SERIES (980)
SCHLAGE	KNOB:	F51
	DEADBOLT:	B60N

FIBERGLASS SKIN: 0.075" MIN. THK.
FOAM CORE: POLYURETHANE - 1.9 PCF MIN.)

Documents Prepared By:
Lyndon F. Schmidt
P.E. No. 43409
RW BUILDING CONSULTANTS, INC.
P.O. Box 230, Valrico, FL 33595
Phone No.: 813.659.9197
FBPE Registry No. 9813

PRODUCT: TKI PRODUCTS FIBERGLASS DOOR

PART OR ASSEMBLY: DOOR PANEL DETAILS

NO.	DATE	REVISIONS	BY

DATE: 9/25/23
SCALE: N.T.S.
DWG. BY: RW
CHK. BY: LFS
DRAWING NO.: FL-42433.2
SHEET 2 OF 13

© 2023 R.W. Building Consultants Inc.

Z:\2023 FBC Drawings\TKI Products\FL-42433\FL-42433.2.dwg

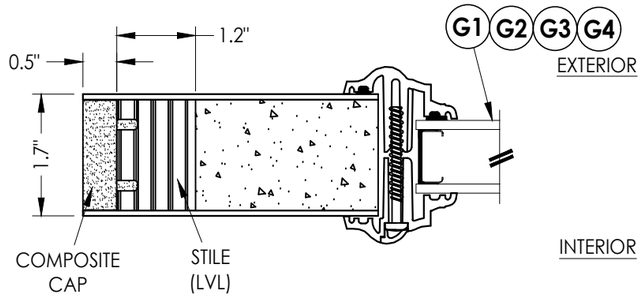

1/3 **HORIZONTAL CROSS SECTION**

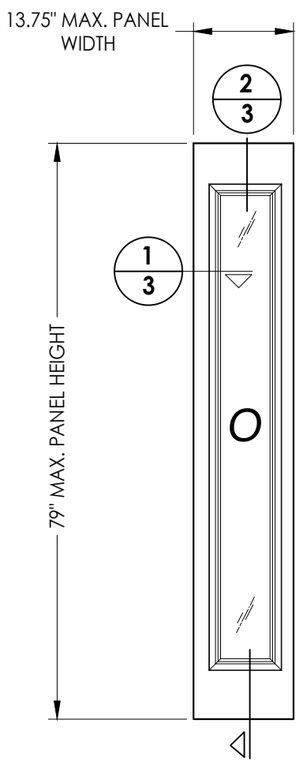

50 **FIBERGLASS SIDELITE PANEL**
BUILDER SERIES

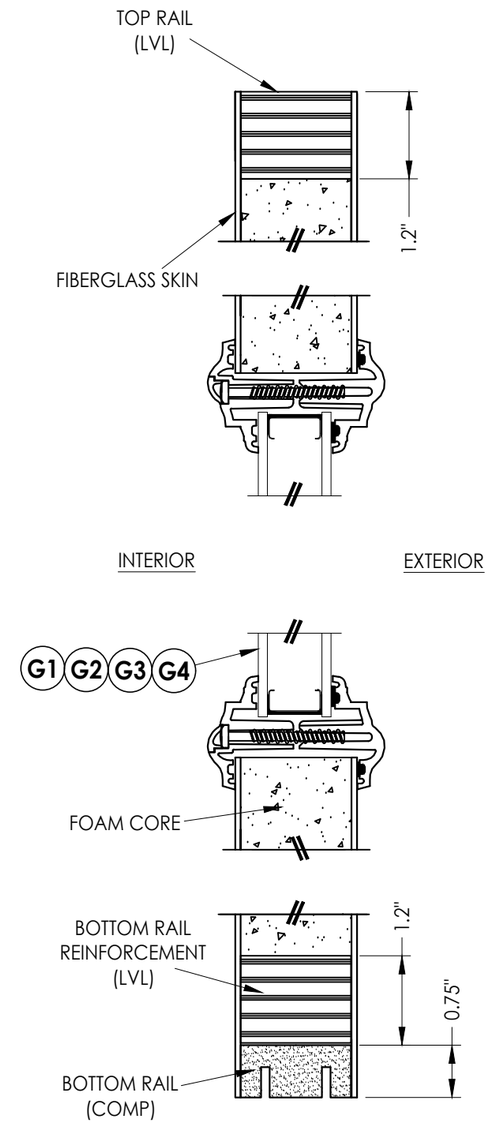

2/3 **VERTICAL CROSS SECTION**

FIBERGLASS SKIN: 0.075" MIN. THK.
FOAM CORE: POLYURETHANE - 1.9 PCF MIN.)

Documents Prepared By:
Lyndon F. Schmidt
P.E. No. 43409

RW BUILDING CONSULTANTS, INC.
P.O. Box 230, Valrico, FL 33595
Phone No.: 813.659.9197
FBPE Registry No. 9813

PRODUCT: TKI PRODUCTS FIBERGLASS DOOR

PART OR ASSEMBLY: SIDELITE PANEL DETAILS

NO.	DATE	REVISIONS	BY

DATE: 9/25/23
SCALE: N.T.S.
DWG. BY: RW
CHK. BY: LFS
DRAWING NO.: FL-42433.2
SHEET 3 OF 13

© 2023 R.W. Building Consultants Inc.

Z:\2023 FBC Drawings\TKI Products\FL-42433\FL-42433.2.dwg

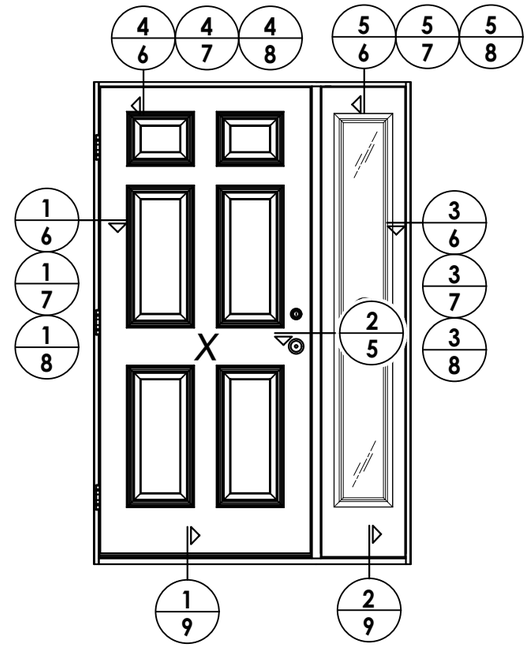

ELEVATION
XO / OX

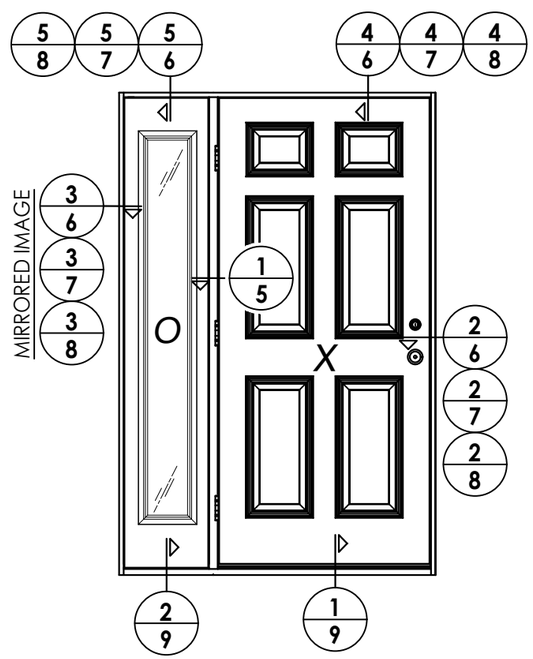

ELEVATION
OX / XO
(CENTER HINGED)

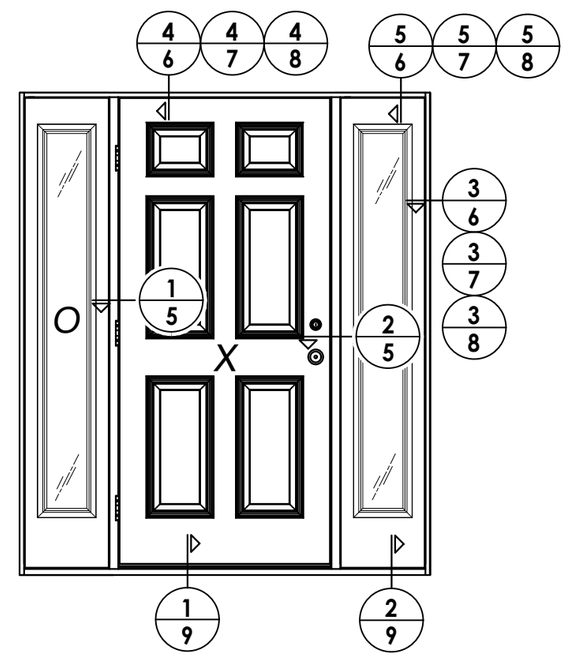

ELEVATION
OXO

Documents Prepared By:
Lyndon F. Schmidt
P.E. No. 43409
RW BUILDING CONSULTANTS, INC.
P.O. Box 230, Valrico, FL 33595
Phone No.: 813.659.9197
FBPE Registry No. 9813

PRODUCT: TKI PRODUCTS FIBERGLASS DOOR

PART OR ASSEMBLY: ELEVATIONS

REVISIONS

NO.	DATE	BY

DATE: 9/25/23
SCALE: N.T.S.
DWG. BY: RW
CHK. BY: LFS
DRAWING NO.: FL-42433.2
SHEET 4 OF 13

© 2023 R.W. Building Consultants Inc.

Z:\2023 FBC Drawings\TKI Products\FL-42433\FL-42433.2.dwg

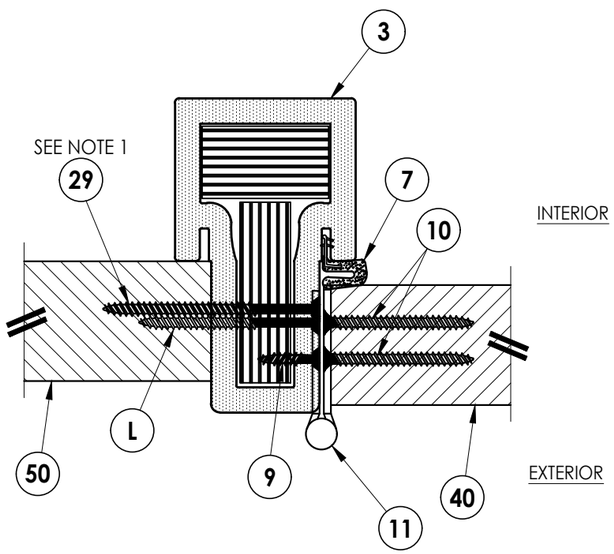

1/5 HORIZONTAL CROSS SECTION
Outswing shown (Inswing similar)

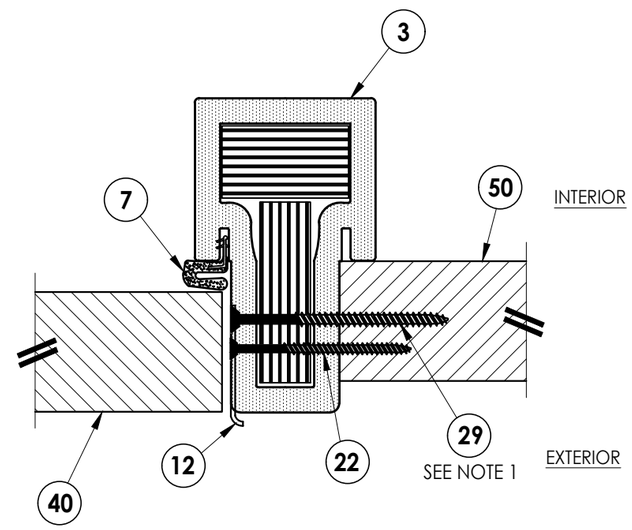

2/5 HORIZONTAL CROSS SECTION
Outswing shown (Inswing similar)

NOTES:
1. Sidelite assembly screws located 10" from each end plus 4 more equally spaced (6 screws total along side jamb).

Documents Prepared By:
Lyndon F. Schmidt
P.E. No. 43409

RW BUILDING CONSULTANTS, INC.
P.O. Box 230, Valrico, FL 33595
Phone No.: 813.659.9197
FBPE Registry No. 9813

PRODUCT: TKI PRODUCTS FIBERGLASS DOOR

PART OR ASSEMBLY: HORIZONTAL CROSS SECTIONS

NO.	DATE	BY

REVISIONS

DATE: 9/25/23
SCALE: N.T.S.
DWG. BY: RW
CHK. BY: LFS
DRAWING NO.: FL-42433.2
SHEET 5 OF 13

© 2023 R.W. Building Consultants Inc.

Z:\2023 FBC Drawings\TKI Products\FL-42433\FL-42433.2.dwg

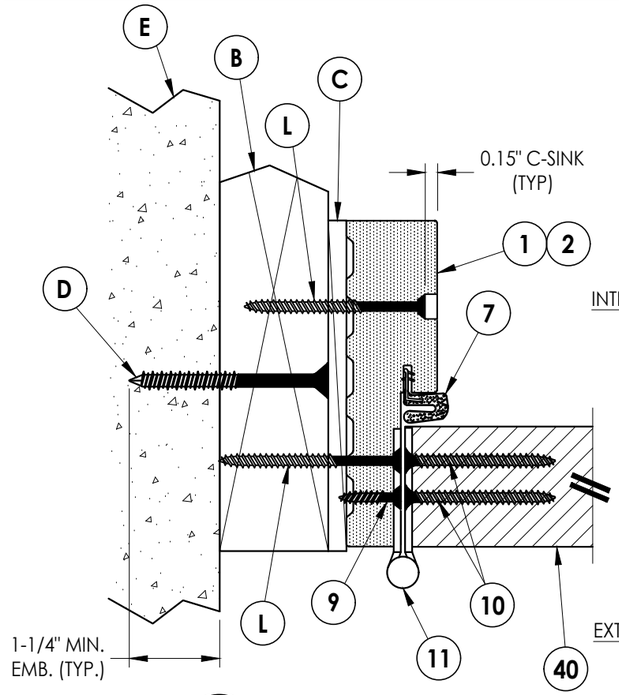

1/6 HORIZONTAL CROSS SECTION
Shown w/ 2X Buck
Outswing shown (Inswing similar)

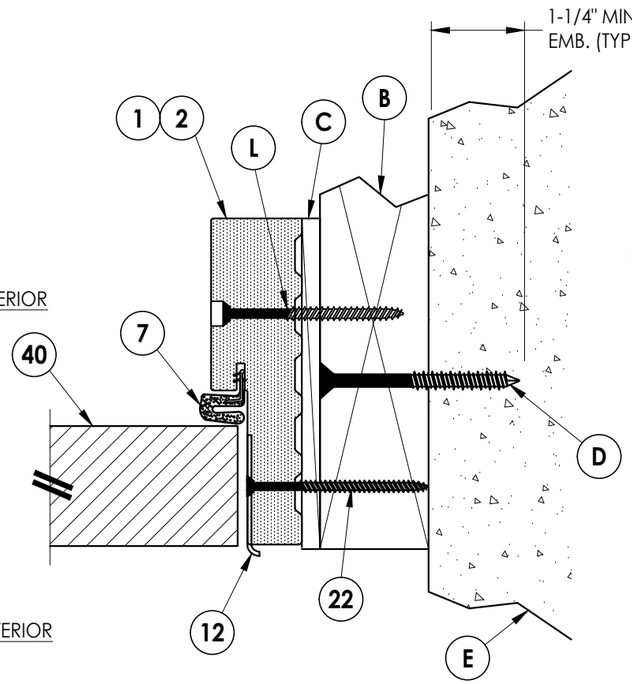

2/6 HORIZONTAL CROSS SECTION
Shown w/ 2X Buck
Outswing shown (Inswing similar)

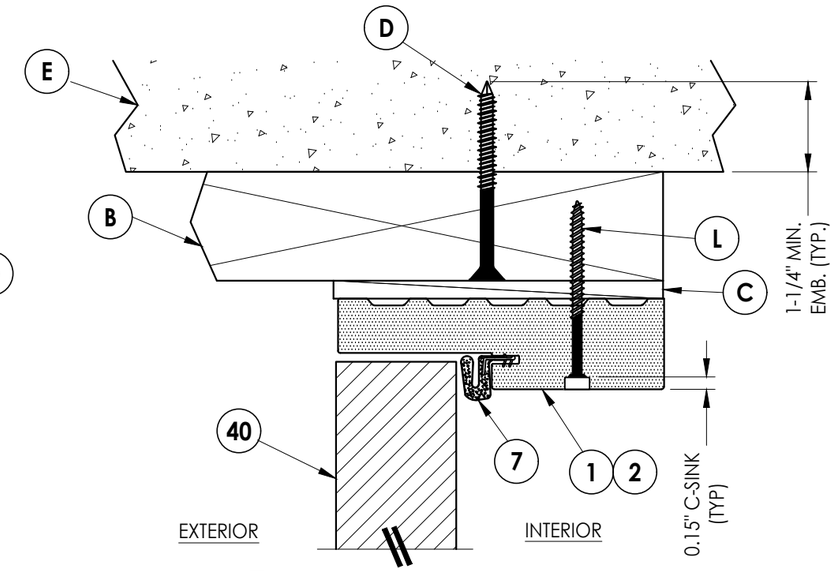

4/6 VERTICAL CROSS SECTION
Shown w/ 2X Buck
Outswing shown (Inswing similar)

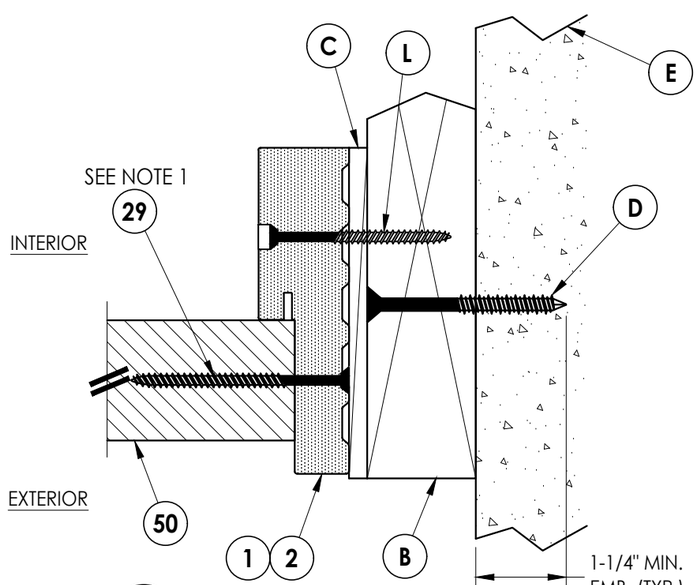

3/6 HORIZONTAL CROSS SECTION
Shown w/ 2X Buck
Outswing shown (Inswing similar)

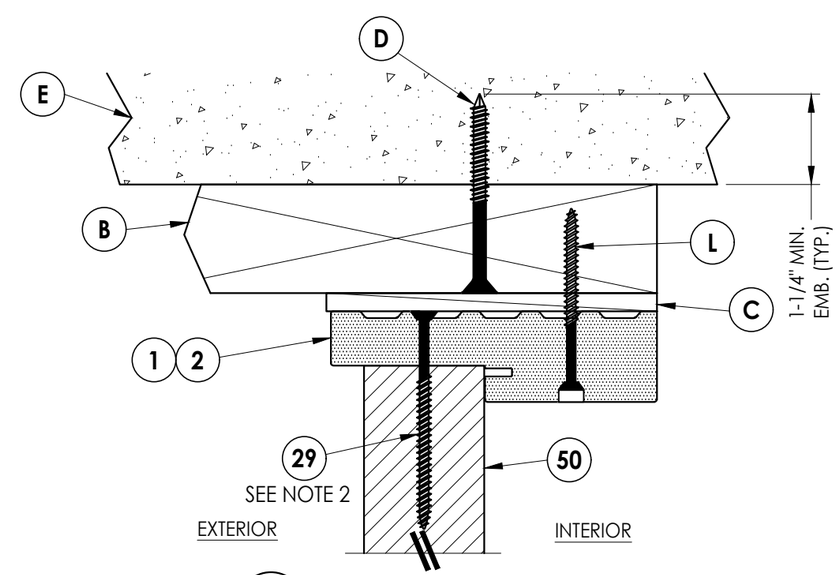

5/6 VERTICAL CROSS SECTION
Shown w/ 2X Buck
Outswing shown (Inswing similar)

Notes:
1. Sidelite assembly screws located 10" from each end and 4 more screws equally spaced between (6 screws total per side jamb).
2. Sidelite assembly screws located 3" from each end (2 screws total along head & sill).

Documents Prepared By:
Lyndon F. Schmidt
P.E. No. 43409
RW BUILDING CONSULTANTS, INC.
P.O. Box 230, Valrico, FL 33595
Phone No.: 813.659.9197
FBPE Registry No. 9813

PRODUCT: TKI PRODUCTS FIBERGLASS DOOR

PART OR ASSEMBLY: HORIZONTAL & VERTICAL CROSS SECTIONS (2X BUCK)

NO.	DATE	REVISIONS	BY

DATE: 9/25/23
SCALE: N.T.S.
DWG. BY: RW
CHK. BY: LFS
DRAWING NO.: FL-42433.2
SHEET 6 OF 13

© 2023 R.W. Building Consultants Inc.

Z:\2023 FBC Drawings\TKI Products\FL-42433\FL-42433.2.dwg

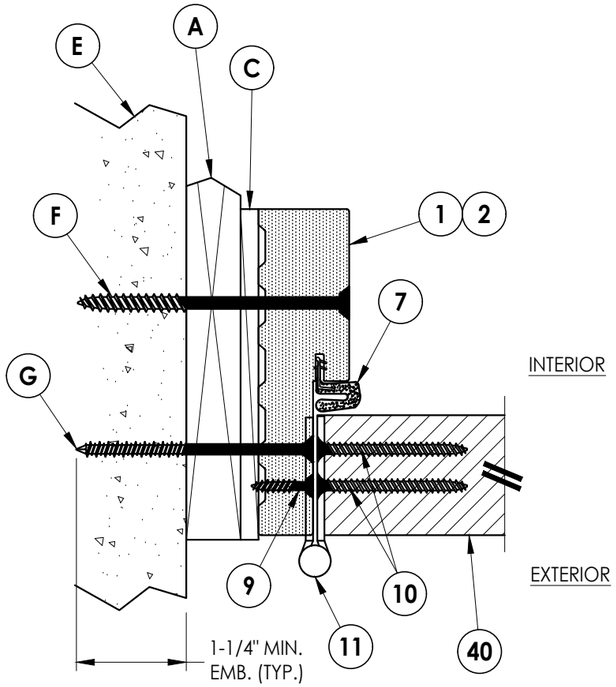

1/7 HORIZONTAL CROSS SECTION
Shown w/ 1X Buck
Outswing shown (Inswing similar)

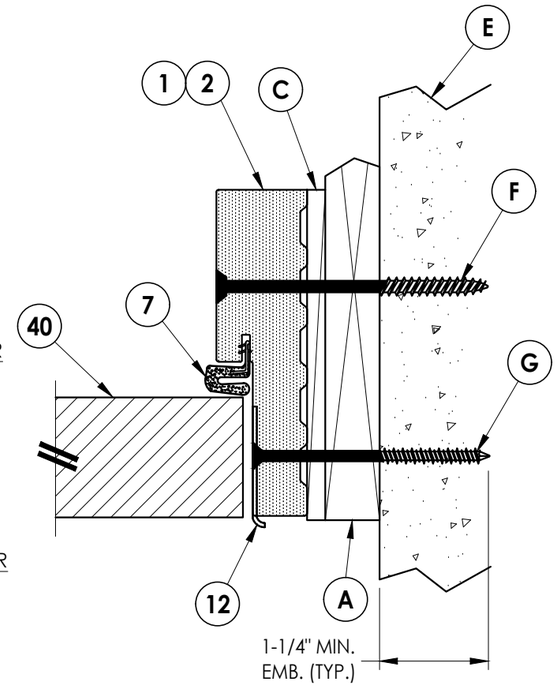

2/7 HORIZONTAL CROSS SECTION
Shown w/ 1X Buck
Outswing shown (Inswing similar)

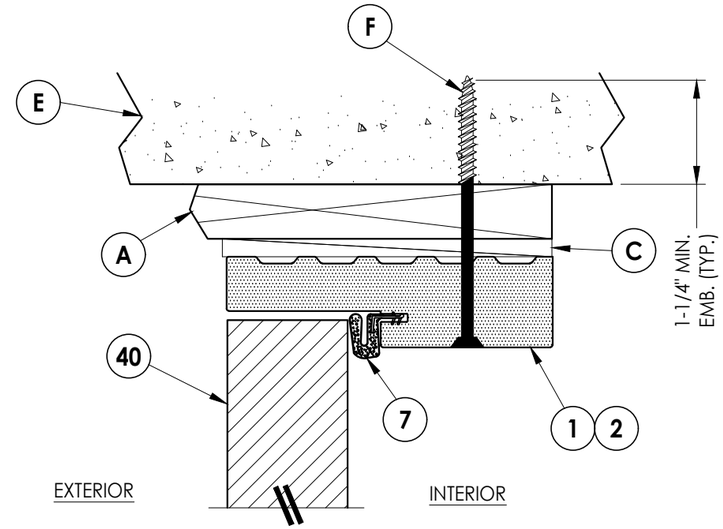

4/7 VERTICAL CROSS SECTION
Shown w/ 1X Buck
Outswing shown (Inswing similar)

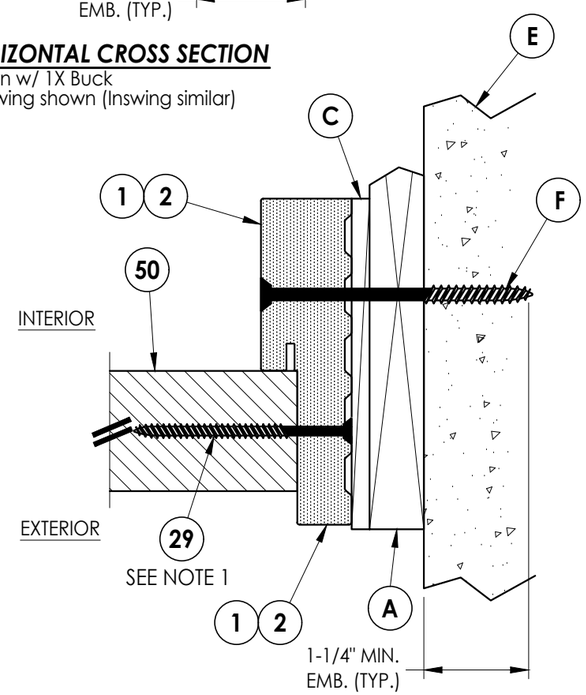

3/7 HORIZONTAL CROSS SECTION
Shown w/ 1X Buck
Outswing shown (Inswing similar)

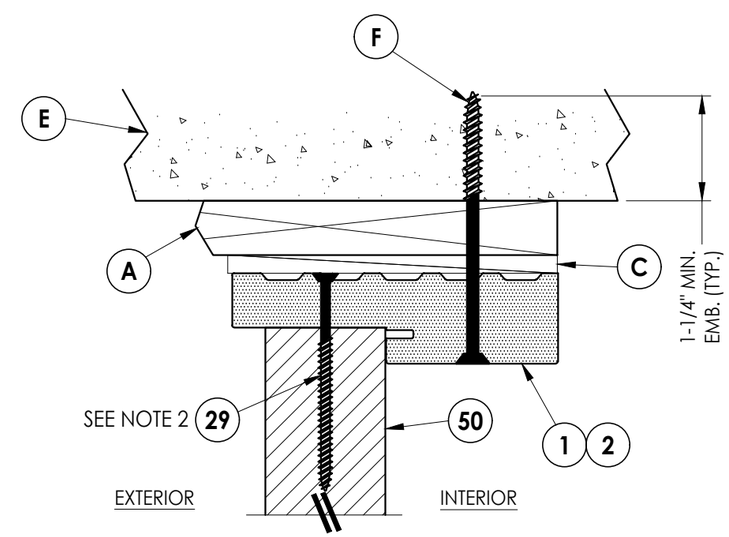

5/7 VERTICAL CROSS SECTION
Shown w/ 1X Buck
Outswing shown (Inswing similar)

Notes:
1. Sidelite assembly screws located 10" from each end and 4 more screws equally spaced between (6 screws total per side jamb).
2. Sidelite assembly screws located 3" from each end (2 screws total along head & sill).

Documents Prepared By:
Lyndon F. Schmidt
P.E. No. 43409
RW BUILDING CONSULTANTS, INC.
P.O. Box 230, Valrico, FL 33595
Phone No.: 813.659.9197
FBPE Registry No. 9813

PRODUCT: TKI PRODUCTS FIBERGLASS DOOR

PART OR ASSEMBLY: HORIZONTAL & VERTICAL CROSS SECTIONS (1X BUCK)

NO.	DATE	BY

REVISIONS

DATE: 9/25/23
SCALE: N.T.S.
DWG. BY: RW
CHK. BY: LFS
DRAWING NO.: FL-42433.2
SHEET 7 OF 13

© 2023 R.W. BUILDING CONSULTANTS INC.

Z:\2023 FBC Drawings\TKI Products\FL-42433\FL-42433.2.dwg

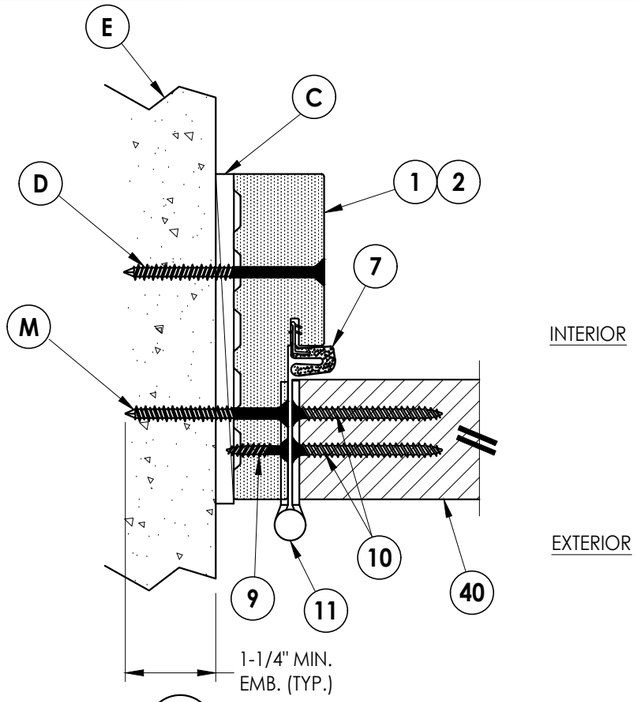

1/8 HORIZONTAL CROSS SECTION
Shown Direct to Masonry
Outswing shown (Inswing similar)

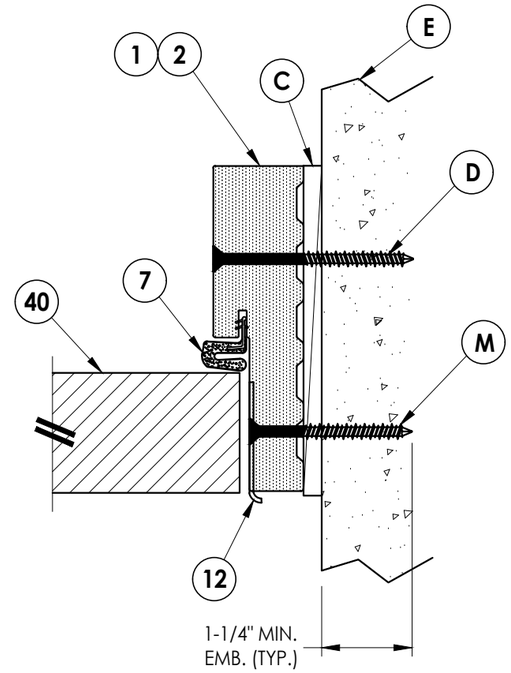

2/8 HORIZONTAL CROSS SECTION
Shown Direct to Masonry
Outswing shown (Inswing similar)

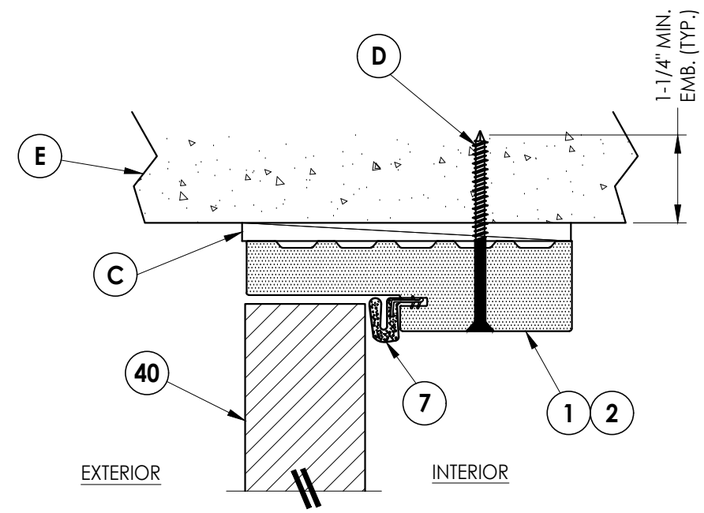

4/8 VERTICAL CROSS SECTION
Shown Direct to Masonry
Outswing shown (Inswing similar)

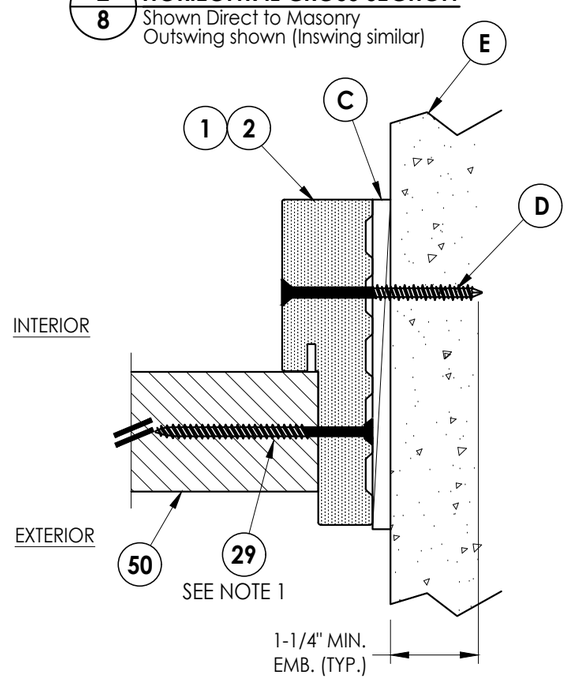

3/8 HORIZONTAL CROSS SECTION
Shown Direct to Masonry
Outswing shown (Inswing similar)

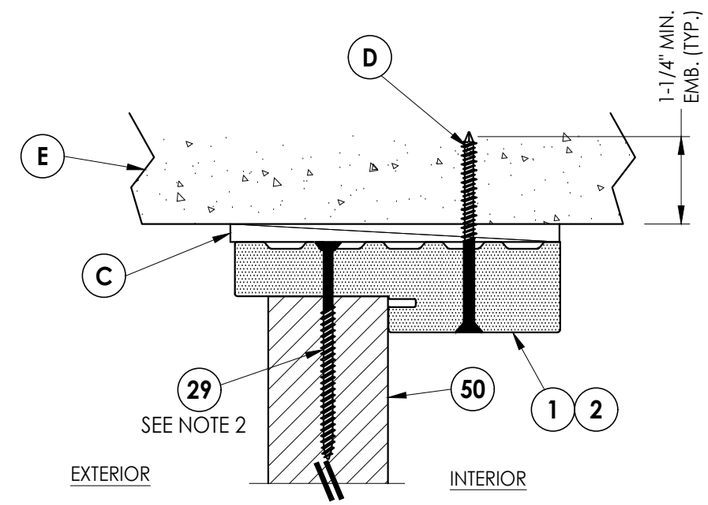

5/8 VERTICAL CROSS SECTION
Shown Direct to Masonry
Outswing shown (Inswing similar)

Notes:
1. Sidelite assembly screws located 10" from each end and 4 more screws equally spaced between (6 screws total per side jamb).
2. Sidelite assembly screws located 3" from each end (2 screws total along head & sill).

Documents Prepared By:
Lyndon F. Schmidt
P.E. No. 43409
RW BUILDING CONSULTANTS, INC.
P.O. Box 230, Valrico, FL 33595
Phone No.: 813.659.9197
FBPE Registry No. 9813

PRODUCT: TKI PRODUCTS FIBERGLASS DOOR

PART OR ASSEMBLY: HORIZONTAL & VERTICAL CROSS SECTIONS (DIRECT TO MASONRY)

NO.	DATE	REVISIONS	BY

DATE: 9/25/23
SCALE: N.T.S.
DWG. BY: RW
CHK. BY: LFS
DRAWING NO.: FL-42433.2
SHEET 8 OF 13

© 2023 R.W. BUILDING CONSULTANTS INC.

Z:\2023 FBC Drawings\TKI Products\FL-42433\FL-42433.2.dwg

Note:
1. Sidelite assembly screws located 3" from each end (2 screws total along head & sill).

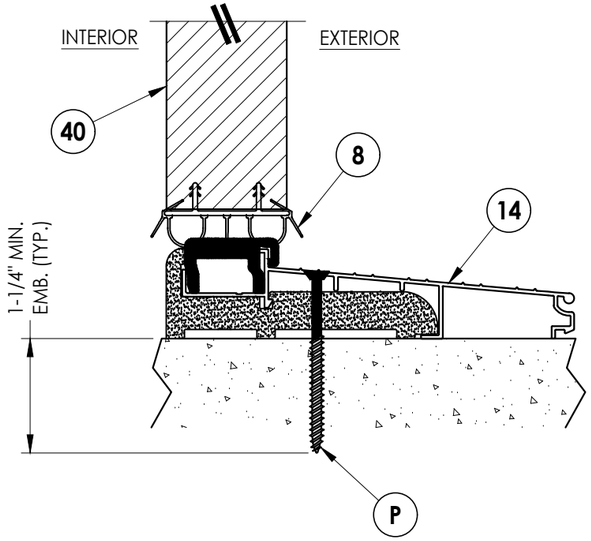

1/9 **VERTICAL CROSS SECTION**
Inswing Threshold

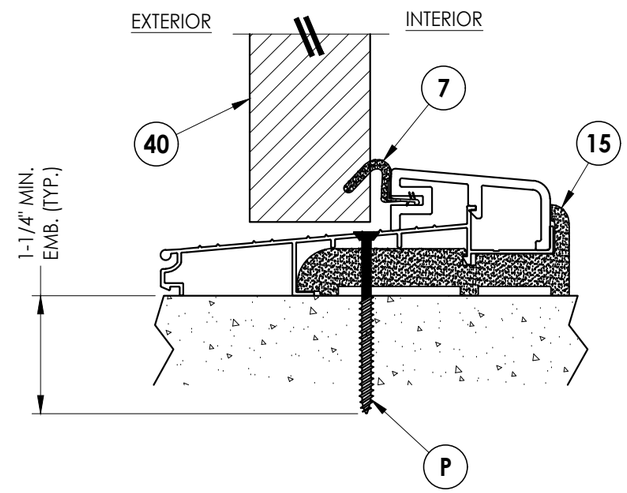

2/9 **VERTICAL CROSS SECTION**
Outswing Threshold

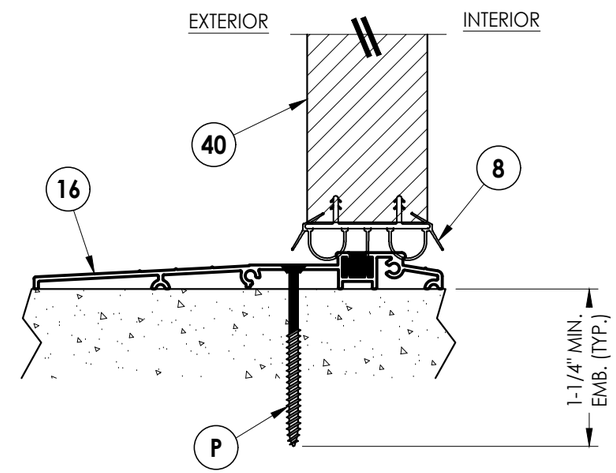

3/9 **VERTICAL CROSS SECTION**
ADA Threshold

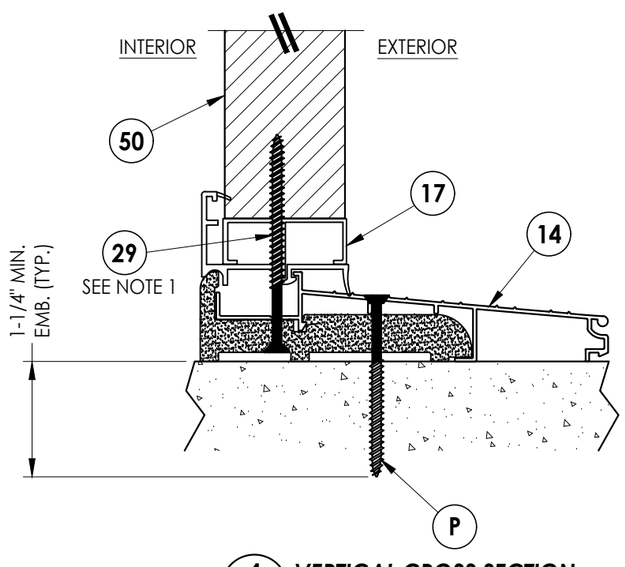

4/9 **VERTICAL CROSS SECTION**
Inswing Threshold

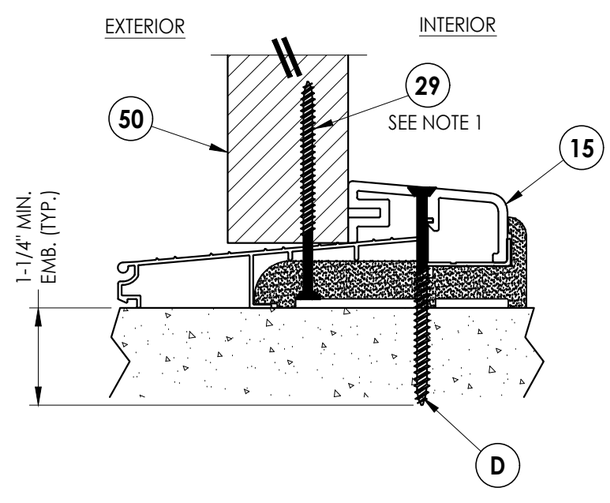

5/9 **VERTICAL CROSS SECTION**
Outswing Threshold

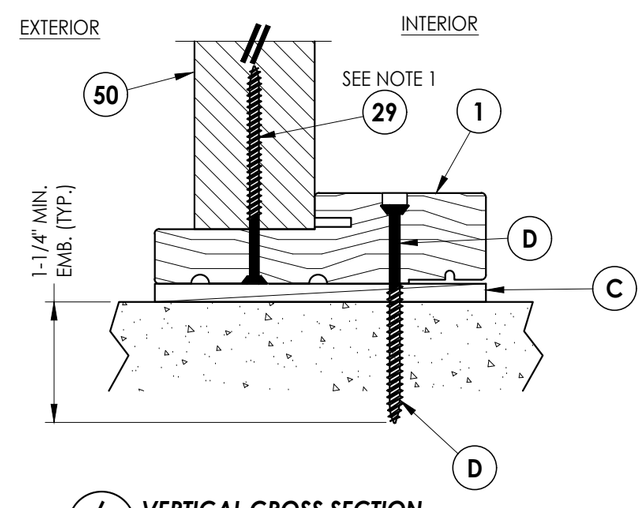

6/9 **VERTICAL CROSS SECTION**

Documents Prepared By:
Lyndon F. Schmidt
P.E. No. 43409

RW BUILDING CONSULTANTS, INC.
P.O. Box 230, Valrico, FL 33595
Phone No.: 813.659.9197
FBPE Registry No. 9813

PRODUCT: TKI PRODUCTS FIBERGLASS DOOR

PART OR ASSEMBLY: VERTICAL CROSS SECTIONS (THRESHOLDS)

NO.	DATE	REVISIONS	BY

DATE: 9/25/23
SCALE: N.T.S.
DWG. BY: RW
CHK. BY: LFS
DRAWING NO.: FL-42433.2
SHEET 9 OF 13

© 2023 R.W. Building Consultants Inc.

Z:\2023 FBC Drawings\TKI Products\FL-42433\FL-42433.2.dwg

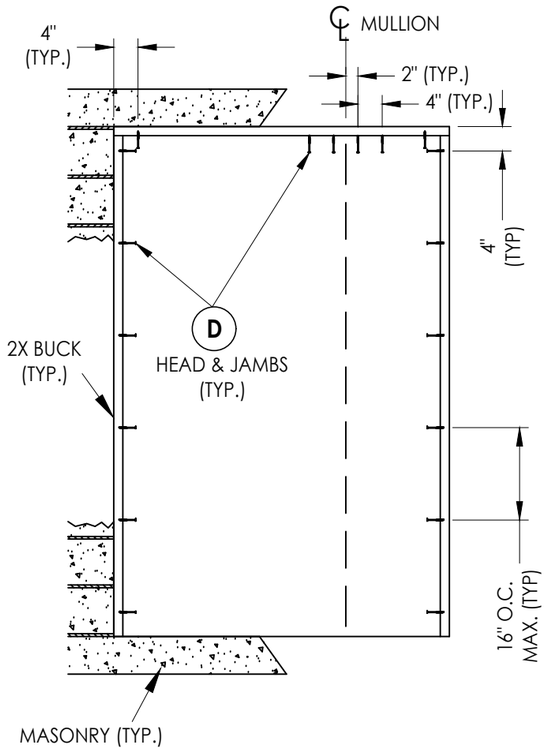

XO, OX

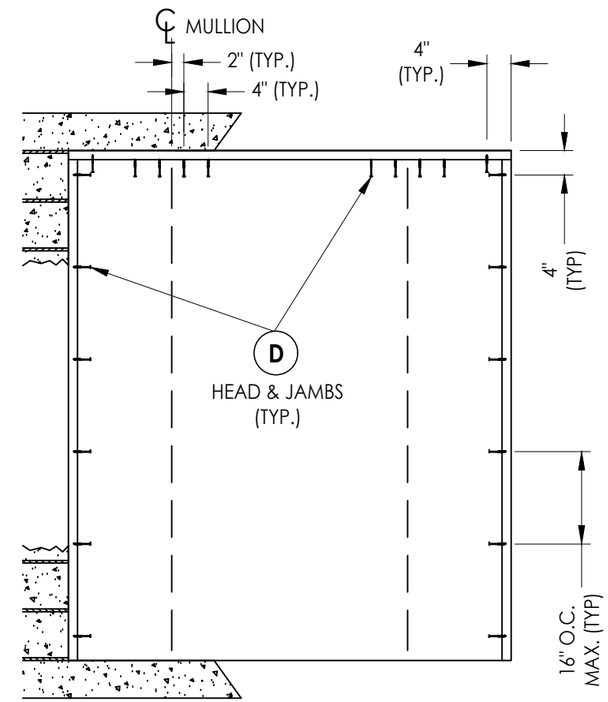

OXO

2X BUCK ANCHORING

Documents Prepared By:
Lyndon F. Schmidt
P.E. No. 43409

RW BUILDING CONSULTANTS, INC.
P.O. Box 230, Valrico, FL 33595
Phone No.: 813.659.9197
FBPE Registry No. 9813

PRODUCT: TKI PRODUCTS FIBERGLASS DOOR

PART OR ASSEMBLY: BUCK ANCHORING

NO.	DATE	REVISIONS	BY

DATE: 9/25/23
SCALE: N.T.S.
DWG. BY: RW
CHK. BY: LFS
DRAWING NO.: FL-42433.2
SHEET 10 OF 13

© 2023 R.W. Building Consultants Inc.

Z:\2023 FBC Drawings\TKI Products\FL-42433\FL-42433.2.dwg

FRAME CORNERS ATTACHED @ HEAD (TYP.) AS FOLLOWS:
COMPOSITE JAMBS - (4) #10 X 3" FH COMPOSITE DECK SCREWS
WOOD JAMBS - (4) #9 X 2-1/2" COURSE THREAD DRYWALL SCREWS

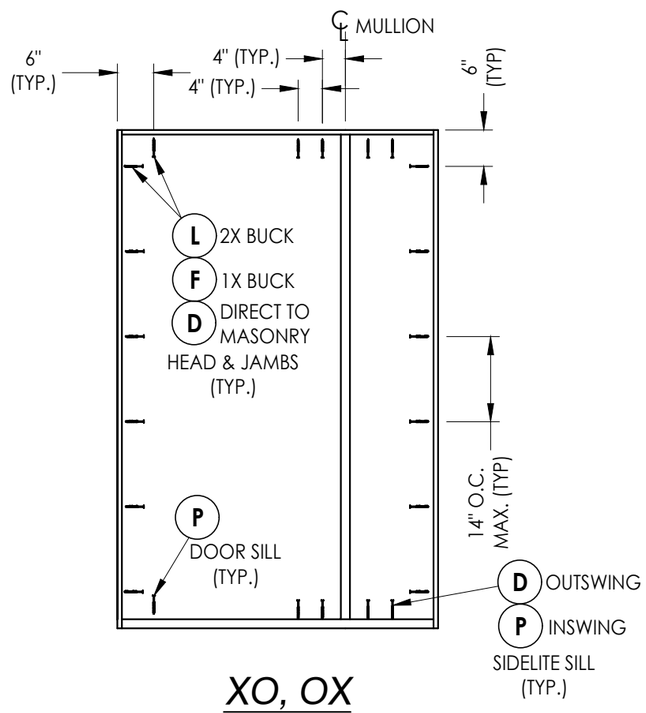

XO, OX

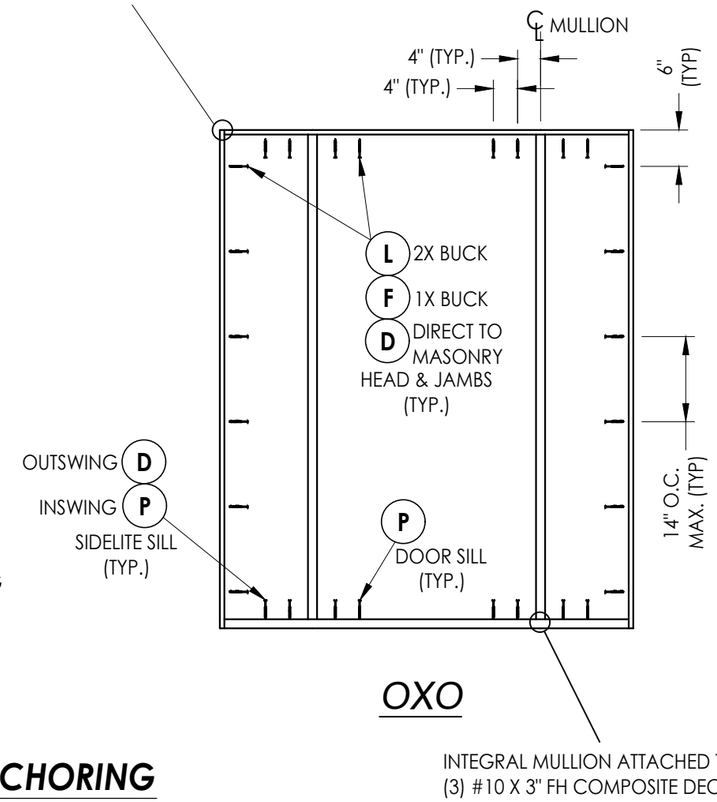

OXO

FRAME ANCHORING

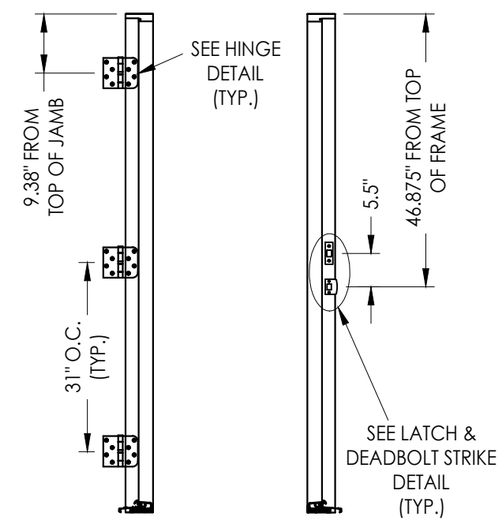

HINGE JAMB STRIKE JAMB

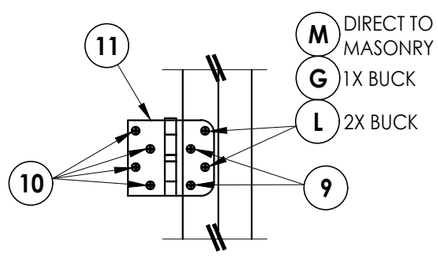

HINGE DETAIL
INSWING

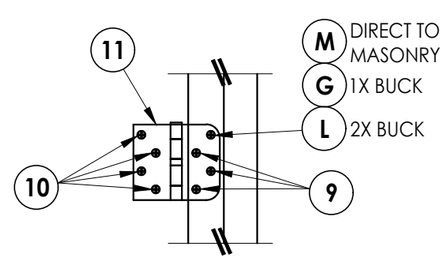

HINGE DETAIL
OUTSWING

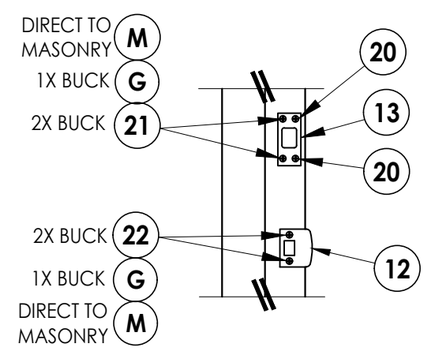

LATCH & DEADBOLT STRIKE DETAIL
KWIKSET

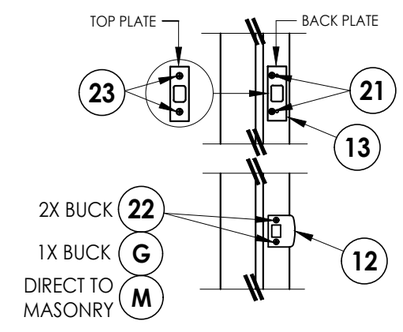

LATCH & DEADBOLT STRIKE DETAIL
SCHLAGE

HARDWARE DETAILS

Documents Prepared By:
Lyndon F. Schmidt
P.E. No. 43409
RW BUILDING CONSULTANTS, INC.
P.O. Box 230, Valrico, FL 33595
Phone No.: 813.659.9197
FBPE Registry No. 9813

PRODUCT: TKI PRODUCTS FIBERGLASS DOOR

PART OR ASSEMBLY: FRAME ANCHORING & HARDWARE DETAILS

NO.	DATE	REVISIONS	BY

DATE: 9/25/23
SCALE: N.T.S.
DWG. BY: RW
CHK. BY: LFS
DRAWING NO.: FL-42433.2
SHEET 11 OF 13

© 2023 R.W. BUILDING CONSULTANTS INC.

Z:\2023 FBC Drawings\TKI Products\FL-42433\FL-42433.2.dwg

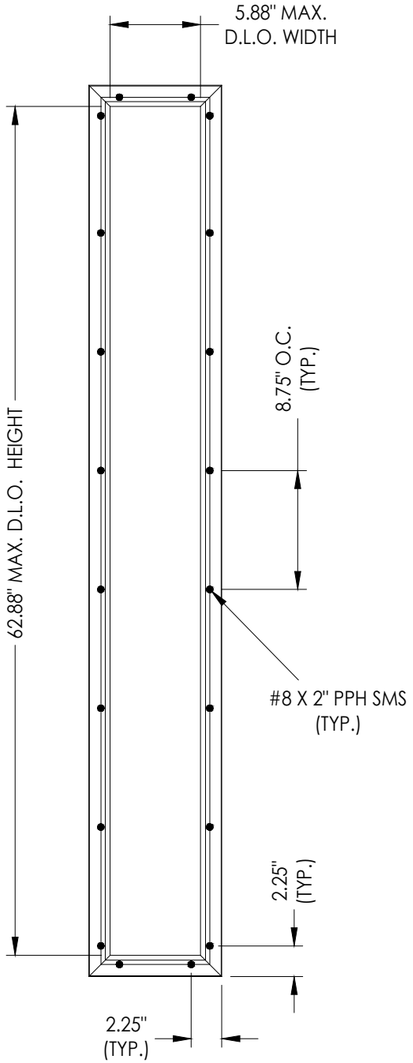

6'-8" LITE FRAME

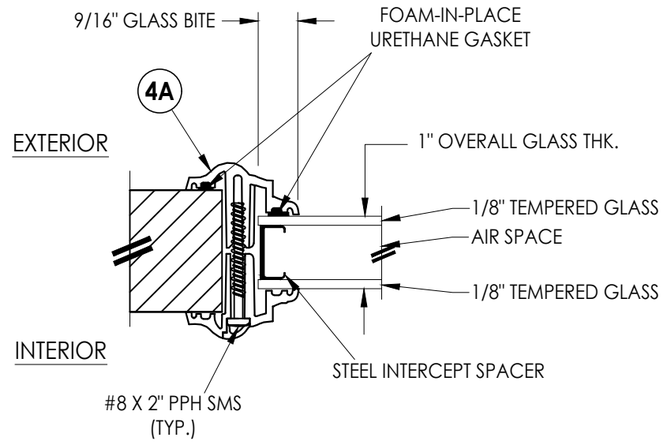

G1 **GLAZING DETAIL**

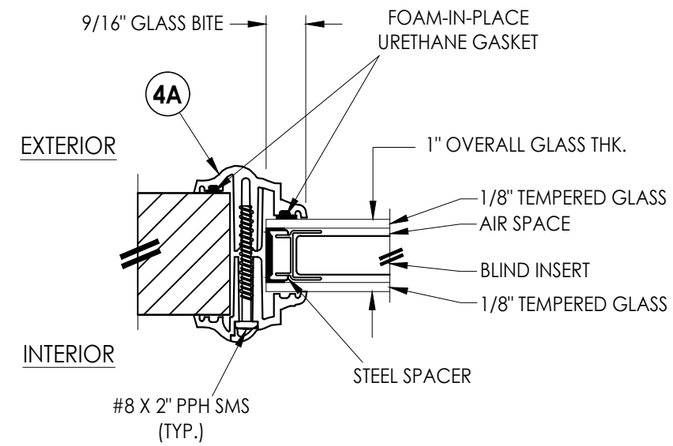

G2 **GLAZING DETAIL**

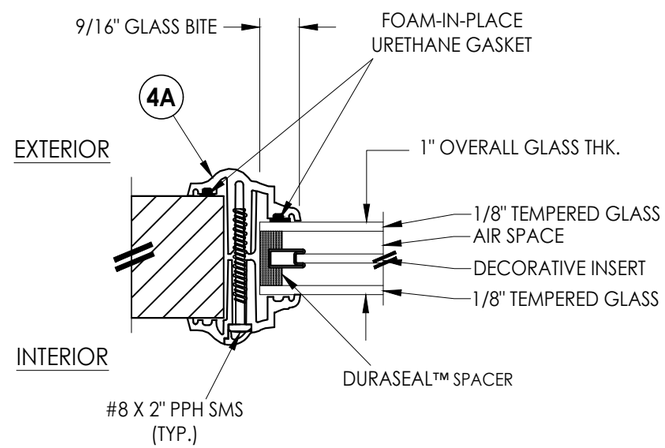

G3 **GLAZING DETAIL**

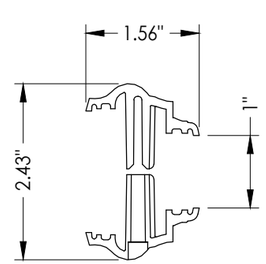

4A **ODL EVOLVE LITE FRAME**
HP POLYPROPYLENE

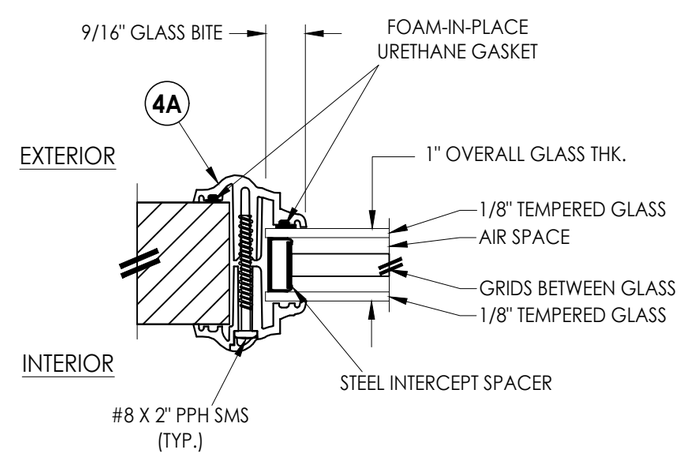

G4 **GLAZING DETAIL**

Documents Prepared By:
Lyndon F. Schmidt
P.E. No. 43409
RW BUILDING CONSULTANTS, INC.
P.O. Box 230, Valrico, FL 33595
Phone No.: 813.659.9197
FBPE Registry No. 9813

PRODUCT: TKI PRODUCTS FIBERGLASS DOOR

PART OR ASSEMBLY: LITE FRAME & GLAZING DETAILS

NO.	DATE	REVISIONS	BY

DATE: 9/25/23
SCALE: N.T.S.
DWG. BY: RW
CHK. BY: LFS
DRAWING NO.: FL-42433.2
SHEET 12 OF 13

© 2023 R.W. Building Consultants Inc.

Z:\2023 FBC Drawings\TKI Products\FL-42433\FL-42433.2.dwg

BILL OF MATERIALS

ITEM #	DESCRIPTION	MATERIAL
A	1X BUCK (G >= 0.42)	WOOD
B	2X BUCK (G >= 0.42)	WOOD
C	1/4" MAX. SHIM SPACE	-
D	1/4" X 2-3/4" PFH DeWALT OR ITW CONCRETE SCREW	STEEL
E	MASONRY - 3,000 PSI MIN. CONCRETE CONFORMING TO ACI 301 OR HOLLOW BLOCK CONFORMING TO ASTM C90	CONCRETE
F	1/4" X 3-3/4" PFH DeWALT OR ITW CONCRETE SCREW	STEEL
G	3/16" X 3-1/4" PFH ITW CONCRETE SCREW	STEEL
J	#10 X 3" PFH WOOD SCREW	STEEL
L	#10 X 2-1/2" PFH WOOD SCREW (1.15" MIN. EMB.)	STEEL
M	3/16" X 2-1/4" PFH ITW CONCRETE SCREW	STEEL
P	1/4" X 2-1/4" PFH DeWALT OR ITW CONCRETE SCREW	STEEL
X	2X REINFORCEMENT (SG = 0.55)	WOOD
1	COMPOSITE JAMB	COMP
2	FINGER JOINT PINE JAMB	WOOD
3	COMPOSITE MULLION	COMP/LVL
7	WEATHERSTRIP	FOAM
8	SWEEP	VINYL
9	#9 X 3/4" PFH WOOD SCREW	STEEL
10	#7 X 2" PFH DRYWALL SCREW	STEEL
11	4" X 4" HINGE	STEEL
12	LATCH STRIKE PLATE	STEEL
13	DEADBOLT STRIKE PLATE	STEEL
14	INSWING THRESHOLD	ALUM/COMP
15	OUTSWING THRESHOLD	ALUM/COMP
16	OUTSWING ADA THRESHOLD	ALUM
17	INSWING SIDELITE ADAPTER	PVC
20	#9 X 1/2" PFH WOOD SCREW	STEEL
21	#12 X 2-1/2" PFH WOOD SCREW	STEEL
22	#8 X 2-1/2" PFH WOOD SCREW	STEEL
23	10-32 X 3/8" PFH MACHINE SCREW	STEEL
29	#10 X 3" FH COMPOSITE DECK SCREW	STEEL
40	DOOR PANEL	-
50	SIDELITE PANEL	-

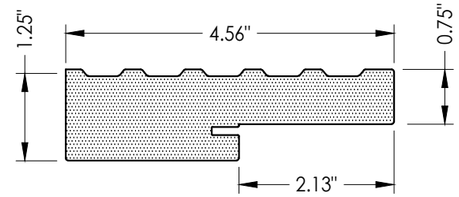

1 **COMPOSITE JAMB**
SURE JAMB (HM SUREROCK)

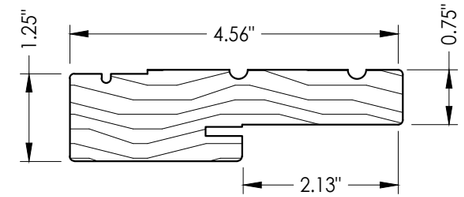

2 **FINGER JOINT PINE JAMB**

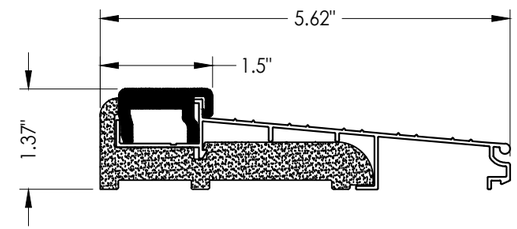

14 **INSWING THRESHOLD**
AFCO IXO

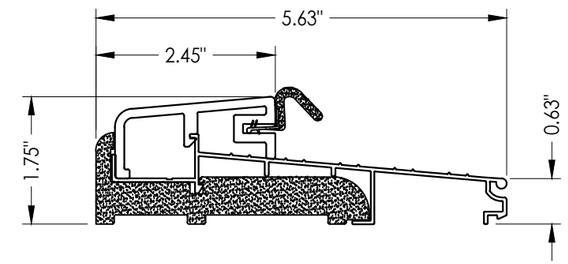

15 **OUTSWING THRESHOLD**
AFCO IXO

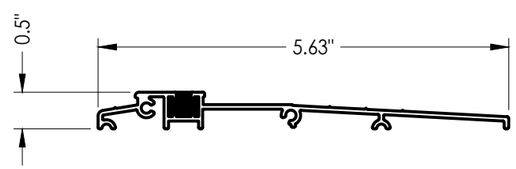

16 **OUTSWING ADA THRESHOLD**
COLUMBIA 486

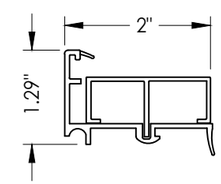

17 **INSWING SIDELITE ADAPTER**

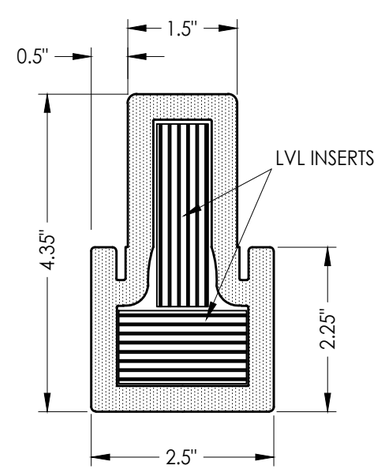

3 **COMPOSITE MULLION**

CONCRETE ANCHOR NOTES:

1. *Concrete anchor locations at the corners may be adjusted to maintain the min. edge distance to mortar joints.*
2. *Concrete anchor locations noted as "MAX. ON CENTER" must be adjusted to maintain the min. edge distance to mortar joints, additional concrete anchors may be required to ensure the "MAX. ON CENTER" dimension are not exceeded.*
3. *Concrete anchor table:*

ANCHOR TYPE	ANCHOR SIZE	MIN. EMBEDMENT	MIN. CLEARANCE TO MASONRY EDGE	MIN. CLEARANCE TO ADJACENT ANCHOR
ITW BUILDEX TAPCON®	3/16"	1-1/4"	3"	1-1/2"
	1/4"	1-1/4"	2"	4"
DeWALT ULTRACON®	1/4"	1-1/4"	1"	4"

WOOD SCREW INSTALLATION NOTES:

1. *Maintain a minimum 5/8" edge distance, 1" end distance, & 1" o.c. spacing of wood screws to prevent the splitting of wood.*

Documents Prepared By:
Lyndon F. Schmidt
P.E. No. 43409
RW BUILDING CONSULTANTS, INC.
P.O. Box 230, Valrico, FL 33595
Phone No.: 813.659.9197
FBPE Registry No. 9813

PRODUCT: TKI PRODUCTS FIBERGLASS DOOR

PART OR ASSEMBLY: BILL OF MATERIALS & COMPONENTS

NO.	DATE	REVISIONS	BY

DATE: 9/25/23
SCALE: N.T.S.
DWG. BY: RW
CHK. BY: LFS
DRAWING NO.: FL-42433.2
SHEET 13 OF 13

© 2023 R.W. Building Consultants Inc.

Z:\2023 FBC Drawings\TKI Products\FL-42433\FL-42433.2.dwg